muADDA.com muADDA.com

III / Strength of Materials / PROD (CBGS)
24/05/16

QP Code : 30648

muADDA.com muADDA.com

DURATION: 3Hours **MAX MARKS: 80**

Note:

1. Question no.1 is compulsory.
2. Attempt any ~~four~~ Three questions out of the remaining five questions.
3. Assume suitable data wherever required.

1 (a) A steel bar 50mm diameter and 640mm long has an axial hole 30mm diameter drilled from end and along the point of its length. The length of the hole is such that the extension of hollow part of bar is equal to extension of solid part of the part, when it is axially loaded by tensile forces at the ends. Calculate the length of the hole. Take E=210 GN/m^2. 8

(b) A steel wire 16m long has a cross sectional area of 4m^2 is fixed at one end and free at the other. The wire weighs 20N. If the modulus of elasticity for the wire material is 200 GPa find deflection at the free end. 4

(c) Explain Section Modulus and Moment of Resistance. 4

(d) Calculate MI of the given section about centroidal x-x axis. 4

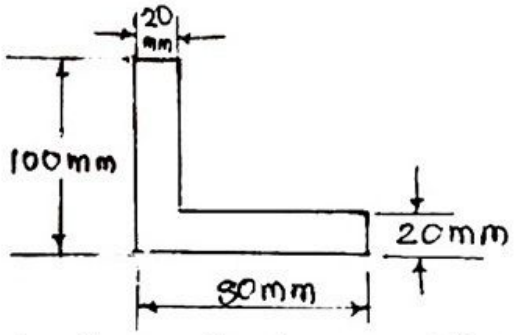

muADDA.com muADDA.com

2 (a) Draw the shear force and bending moment diagrams for the beam shown in figure, indicating the salient points. 10

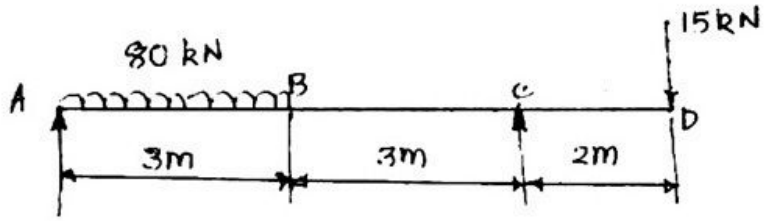

muADDA.com muADDA.com

muADDA.com muADDA.com

(b) A cantilever beam of span 2m has inverted T cross section. The flange at bottom is 150mm wide and 12mm thick, the web is 12mm thick and the overall depth of the section is 150mm. If the permissible tensile stress is 125MPa, find the maximum intensity of udl that may be applied all over the span. Also calculate the force resisted by the flange. 10

muADDA.com

3 (a) A simply supported beam of uniform section is 10m long. It carries point loads of 100kN and 80kN at a distance of 2m and 5m respectively from left end. Calculate deflection under 80kN load. Also find maximum deflection. Take $I=18\times10^8$ mm^4 and $E= 200$kN/mm^2. 10

(b) A hollow cast iron column with fixed end supports an axial load of 1000kN. if the column is 5m long and has an external diameter of 250mm, find the thickness of material required. Use the Rankine formula taking $\alpha = 1/7500$ and working stress of 80 MPa. 10

4 (a) A solid circular shaft transmits 300kW at 100rpm. If the shear stress is not to exceed 80 MPa, find the diameter of shaft. What % of saving would be made if this shaft were altered by a hollow one whose internal diameter to external diameter ratio is 0.6. The length, material and shear stress are kept same. 10

(b) A cast iron bracket subjected to bending has a c/s of I shape with unequal flanges. Top flange 240mm x 40mm, bottom flange 120mm x 40mm and web 240mm x 40mm. if the section is subjected to shear force of 120kN, draw shear stress distribution diagram over the depth of the section. 10

5 (a) At a cross section of a beam, there is a longitudinal bending stress of 110 N/mm^2 tensile and a transverse shear stress of 45 N/mm^2. Find the resultant stress in magnitude and direction on a plane inclined at 30° to the longitudinal axis. (There is no normal stress on longitudinal plane.) Also determine the principal stresses and strains. 10

(b) Draw the shear force and bending moment diagrams for the beam shown in figure 10

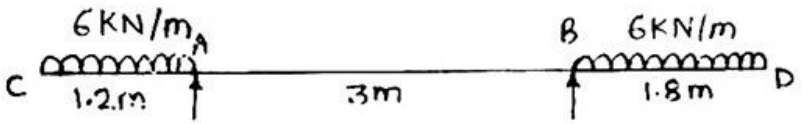

muADDA.com

6 (a) An unknown weight falls by 22mm onto a collar rigidly connected to the lower end of the vertical bar 3m long and 500mm^2 in section. If maximum instantaneous extension is known to be 2.5mm, find the corresponding stress and magnitude of falling weight. Take $E= 2\times10^5$ N/mm^2. 10

muADDA.com

(b) A square column of size 400mm x 400mm is subjected to axial load of 40 kN. In addition to this load a load of 40 kN is acting at an eccentricity of 20mm about both the x-x and y-y axis. Find the stresses at all the corners. 10

---

muADDA.com muADDA.com